PROJECT REFERENCE NO.	SHEET NO.
HS-2005G	Sig. 2.1

18 CHANNEL IP CONFLICT MONITOR PROGRAMMING DETAIL

(remove jumpers and set switches as shown)

REMOVE DIODE JUMPERS I-5, I-6, I-9, I-11, I-15, 2-5, 2-6, 2-9, 2-11, 2-15, 4-8, 4-10, 4-12, 4-14, 5-9, 5-11, 6-9, 6-11, 6-15, 8-10, 8-12, 8-14, 9-11, 9-15, 10-12, 10-14, 11-15 and 12-14.

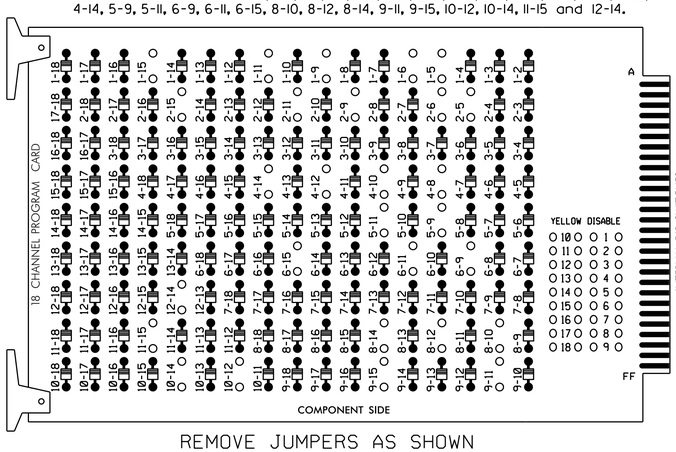

REMOVE JUMPERS AS SHOWN

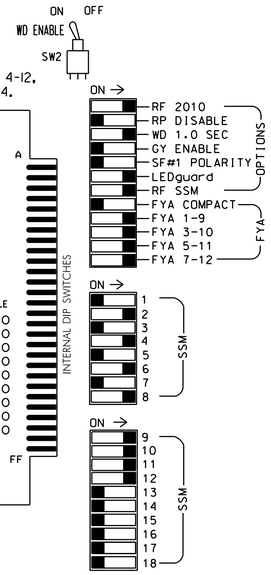

NOTES:

1. Card is provided with all diode jumpers in place. Removal of any jumper allows its channels to run concurrently.
2. Ensure jumpers SEL2-SEL5 and SEL9 are present on the monitor board.
3. Ensure that Red Enable is active at all times during normal operation.
4. Integrate monitor with Ethernet network in cabinet.

NOTES

1. To prevent "flash-conflict" problems, insert red flash program blocks for all unused vehicle load switches in the output file. The installer shall verify that signal heads flash in accordance with the Signal Plans.
2. Program controller to start up in phases 2 and 6 Green/ Don't Walk.
3. Enable simultaneous gap-out feature for all phases.
4. Program phases 2 and 6 for volume density operation.
5. Program phases 4 and 8 for dual entry.
6. The cabinet and controller are part of the Raleigh Signal System.

EQUIPMENT INFORMATION

CONTROLLER.....2070LX
CABINET.....332 W/ AUX
SOFTWARE.....SE-PAC2070
CABINET MOUNT.....BASE
OUTPUT FILE POSITIONS...18 WITH AUX. OUTPUT FILE
LOAD SWITCHES USED.....S1,S2,S5,S6,S7,S8,S9,S11,AUX S1, AUX S2,AUX S4,AUX S5
PHASES USED.....1,2,4,4PED,5,6,6PED,8
OVERLAP "A".....*
OVERLAP "B".....*
OVERLAP "C".....*
OVERLAP "D".....*

* See sheet 2 for Overlap Programming Detail

SIGNAL HEAD HOOK-UP CHART

LOAD SWITCH NO.	S1	S2	S3	S4	S5	S6	S7	S8	S9	S10	S11	S12	AUX S1	AUX S2	AUX S3	AUX S4	AUX S5	AUX S6
CMU CHANNEL NO.	1	2	13	3	4	14	5	6	15	7	8	16	9	10	17	11	12	18
PHASE	1	2	2 PED	3	4	4 PED	5	6	6 PED	7	8	8 PED	OLA	OLB	SPARE	OLC	OLD	SPARE
SIGNAL HEAD NO.	11★	21,22	NU	NU	41,42	P41, P42	51★	61,62	P61, P62	NU	81,82	NU	11★	83★	NU	51★	43★	NU
RED		128			101			134			107							
YELLOW	*	129			102		*	135			108							
GREEN		130			103			136			109							
RED ARROW													A121	A124		A114	A101	
YELLOW ARROW													A122	A125		A115	A102	
FLASHING YELLOW ARROW													A123	A126		A116	A103	
GREEN ARROW	127						133											
✋						104			119									
🚶						106			121									

NU = Not Used

★ See pictorial of head wiring in detail this sheet.
* Denotes install load resistor. See load resistor installation detail this sheet.

FYA SIGNAL WIRING DETAIL

(wire signal heads as shown)

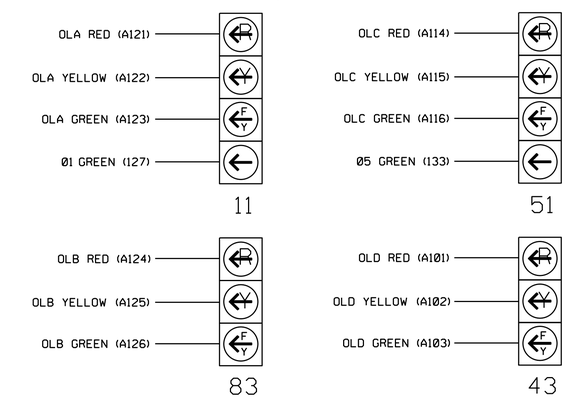

INPUT FILE POSITION LAYOUT

(front view)

		1	2	3	4	5	6	7	8	9	10	11	12	13	14
FILE "I"	U	Ø1 1A	Ø2 2A	SLOT EMPTY	SLOT EMPTY	SLOT EMPTY	Ø4 4A	SLOT EMPTY	SLOT EMPTY	SLOT EMPTY	SLOT EMPTY	SLOT EMPTY	NOT USED	Ø6 PED DC ISOLATOR	FS DC ISOLATOR
	L	NOT USED	NOT USED				Ø4 4B						Ø4 PED DC ISOLATOR	NOT USED	ST DC ISOLATOR
FILE "J"	U	Ø5 5A	Ø6 6A	SLOT EMPTY	SLOT EMPTY	SLOT EMPTY	Ø8 8A	SLOT EMPTY	SLOT EMPTY	SLOT EMPTY	SLOT EMPTY	SLOT EMPTY	SLOT EMPTY	SLOT EMPTY	SLOT EMPTY
	L	NOT USED	Ø6 6B				Ø8 8B								

EX.: 1A, 2A, ETC. = LOOP NO.'S

FS = FLASH SENSE
ST = STOP TIME

INPUT FILE CONNECTION & PROGRAMMING CHART

LOOP NO.	LOOP TERMINAL	INPUT FILE POS.	PIN NO.	DETECTOR NO.	NEMA PHASE	DELAY TIME	EXTEND (STRETCH) TIME
1A	TB2-1,2	I1U	56	1	1	5	
2A	TB2-5,6	I2U	39	3	2		
4A	TB4-9,10	I6U	41	11	4	3	
4B	TB4-11,12	I6L	45	12	4	10	
5A	TB3-1,2	J1U	55	19	5	5	
6A	TB3-5,6	J2U	40	21	6		
6B	TB3-7,8	J2L	44	22	6		
8A	TB5-9,10	J6U	42	31	8	3	
8B	TB5-11,12	J6L	46	32	8	10	
PED PUSH BUTTONS							
P41,P42	TB8-5,6	I12L	69	PED 4	4 PED		
P61,P62	TB8-7,9	I13U	68	PED 6	6 PED		

NOTE:
INSTALL DC ISOLATORS IN INPUT FILE SLOTS I12 AND I13.

INPUT FILE POSITION LEGEND: J2L
FILE J
SLOT 2
LOWER

This plan supersedes the plan signed and sealed on 6/1/2021.

THIS ELECTRICAL DETAIL IS FOR
THE SIGNAL DESIGN: 05-1780
DESIGNED: February 2024
SEALED: 02/27/2024
REVISED: N/A

LOAD RESISTOR INSTALLATION DETAIL

(install resistors as shown below)

ACCEPTABLE VALUES	
VALUE (ohms)	WATTAGE
1.5K - 1.9K	25W (min)
2.0K - 3.0K	10W (min)

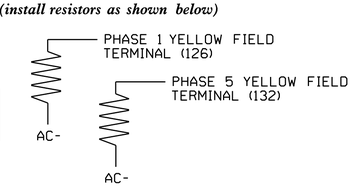

FLASHER CIRCUIT MODIFICATION DETAIL

IN ORDER TO INSURE THAT SIGNALS FLASH CONCURRENTLY ON THE SAME APPROACH, MAKE THE FOLLOWING FLASHER CIRCUIT CHANGES:

1. ON REAR OF PDA - REMOVE WIRE FROM TERM. T2-4 AND TERMINATE ON T2-2.
2. ON REAR OF PDA - REMOVE WIRE FROM TERM. T2-5 AND TERMINATE ON T2-3.
3. REMOVE FLASHER UNIT 2.

THE CHANGES LISTED ABOVE TIES ALL PHASES AND OVERLAPS TO FLASHER UNIT 1.

Electrical Detail - Sheet 1 of 3

DOCUMENT NOT CONSIDERED FINAL UNLESS ALL SIGNATURES COMPLETED

ELECTRICAL AND PROGRAMMING DETAILS FOR:

SR 2215 (Buffaloe Road) at SR 2214 (Southall Road)/ Brintons Cottage Street

Division 5 Wake County Raleigh

PLAN DATE: February 2024 REVIEWED BY:
PREPARED BY: S.Kirkpatrick REVIEWED BY:

REVISIONS	INIT.	DATE

Prepared in the Offices of:
Mobility and Safety Division
Traffic Engineering & Signals Management Section
750 N.Greenfield Pkwy,Garner,NC 27529

SEAL
NORTH CAROLINA PROFESSIONAL SEAL 036833 ENGINEER RYAN W. HOUGH

DocuSigned by: Ryan W. Hough 02/27/2024
A3D32DEAA2654C3...
DATE

SIG. INVENTORY NO. 05-1780

27-FEB-2024 14:46
S:\TMS\Sig\Signals\Workgroups\Sig Mgmt\Projects From Signal Design\Active Projects\Kirkpatrick\05-1780 & 05-2247 (HS-2005G)\05178O_sm.ele.20240227.dgn
sgkirkpatrick