PROJECT REFERENCE NO.	SHEET NO.
HS-2005G	Sig. 1.1

18 CHANNEL IP CONFLICT MONITOR PROGRAMMING DETAIL

(remove jumpers and set switches as shown)

REMOVE DIODE JUMPERS 2-6, 2-9, 2-11, 2-13, 2-15, 4-8, 4-10, 4-12, 4-14, 4-16, 6-9, 6-11, 6-13, 6-15, 8-10, 8-12, 8-14, 8-16, 9-11, 9-13, 9-15, 10-12, 10-14, 10-16, 11-13, 11-15, 12-14, 12-16, 13-15 and 14-16.

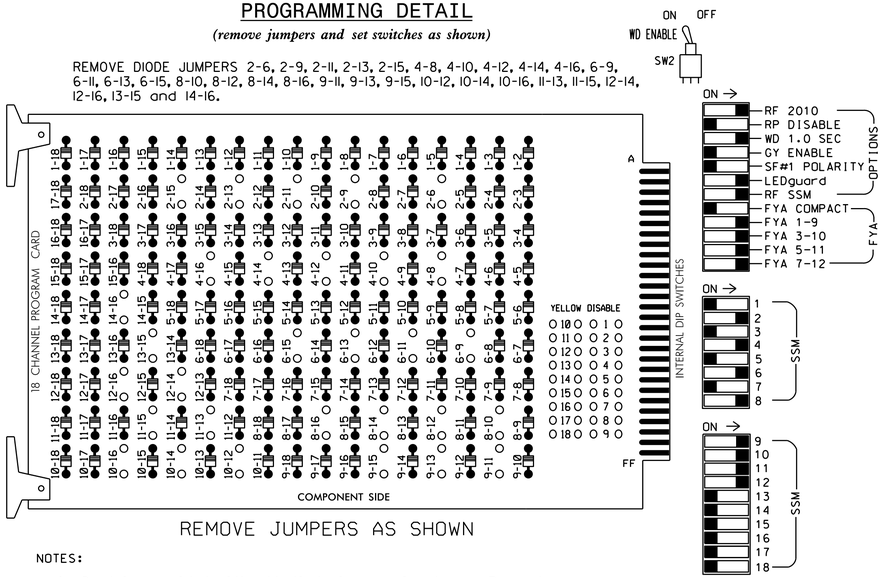

REMOVE JUMPERS AS SHOWN

■ = DENOTES POSITION OF SWITCH

NOTES:

1. Card is provided with all diode jumpers in place. Removal of any jumper allows its channels to run concurrently.
2. Ensure jumpers SEL2-SEL5 and SEL9 are present on the monitor board.
3. Ensure that Red Enable is active at all times during normal operation.
4. Integrate monitor with Ethernet network in cabinet.

NOTES

1. To prevent "flash-conflict" problems, insert red flash program blocks for all unused vehicle load switches in the output file. The installer shall verify that signal heads flash in accordance with the Signal Plans.
2. Program controller to start up in phases 2 and 6 Green/ Don't Walk.
3. Enable simultaneous gap-out feature for all phases.
4. Program phases 2 and 6 for volume density operation.
5. Program phases 4 and 8 for dual entry.
6. The cabinet and controller are part of the Raleigh Signal System.

EQUIPMENT INFORMATION

CONTROLLER.....2070LX
CABINET.....332 W/ AUX
SOFTWARE.....SE-PAC2070
CABINET MOUNT.....BASE
OUTPUT FILE POSITIONS...18 WITH AUX. OUTPUT FILE
LOAD SWITCHES USED.....S2,S3,S5,S6,S8,S9,S11,S12,AUX S1, AUX S2,AUX S4,AUX S5
PHASES USED.....2,2PED,4,4PED,6,6PED,8,8PED
OVERLAP "A".....*
OVERLAP "B".....*
OVERLAP "C".....*
OVERLAP "D".....*

* See sheet 2 for Overlap Programming Detail

SIGNAL HEAD HOOK-UP CHART

LOAD SWITCH NO.	S1	S2	S3	S4	S5	S6	S7	S8	S9	S10	S11	S12	AUX S1	AUX S2	AUX S3	AUX S4	AUX S5	AUX S6
CMU CHANNEL NO.	1	2	13	3	4	14	5	6	15	7	8	16	9	10	17	11	12	18
PHASE	1	2	2 PED	3	4	4 PED	5	6	6 PED	7	8	8 PED	OLA	OLB	SPARE	OLC	OLD	SPARE
SIGNAL HEAD NO.	NU	21,22	P21, P22	NU	41,42	P41, P42	NU	61,62	P61, P62	NU	81,82	P81, P82	63 ★	83 ★	NU	23 ★	43 ★	NU
RED		128			101			134			107							
YELLOW		129			102			135			108							
GREEN		130			103			136			109							
RED ARROW													A121	A124		A114	A101	
YELLOW ARROW													A122	A125		A115	A102	
FLASHING YELLOW ARROW													A123	A126		A116	A103	
✋			113			104			119			110						
🚶			115			106			121			112						

NU = Not Used

★ See pictorial of head wiring in detail this sheet.

FYA SIGNAL WIRING DETAIL

(wire signal heads as shown)

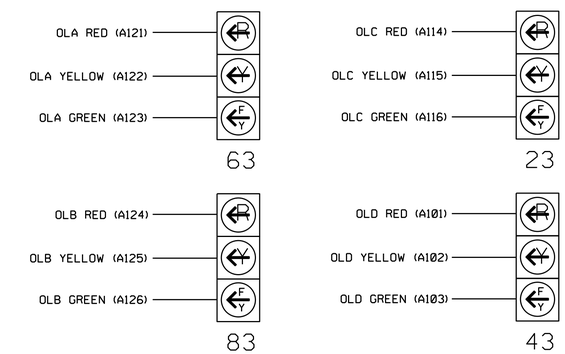

INPUT FILE POSITION LAYOUT

(front view)

		1	2	3	4	5	6	7	8	9	10	11	12	13	14
FILE "I"	U	SLOT EMPTY	Ø2 2A	Ø2 2C	SLOT EMPTY	SLOT EMPTY	Ø4 4A	SLOT EMPTY	SLOT EMPTY	SLOT EMPTY	SLOT EMPTY	SLOT EMPTY	Ø2 PED DC ISOLATOR	Ø6 PED DC ISOLATOR	FS DC ISOLATOR
	L		Ø2 2B	NOT USED			Ø4 4B						Ø4 PED DC ISOLATOR	Ø8 PED DC ISOLATOR	ST DC ISOLATOR
FILE "J"	U	SLOT EMPTY	Ø6 6A	Ø6 6C	SLOT EMPTY	SLOT EMPTY	Ø8 8A	SLOT EMPTY	SLOT EMPTY	SLOT EMPTY	SLOT EMPTY	SLOT EMPTY	SLOT EMPTY	SLOT EMPTY	SLOT EMPTY
	L		Ø6 6B	NOT USED			Ø8 8B								

EX.: 1A, 2A, ETC. = LOOP NO.'S

FS = FLASH SENSE
ST = STOP TIME

INPUT FILE CONNECTION & PROGRAMMING CHART

LOOP NO.	LOOP TERMINAL	INPUT FILE POS.	PIN NO.	DETECTOR NO.	NEMA PHASE	DELAY TIME	EXTEND (STRETCH) TIME
2A	TB2-5,6	I2U	39	3	2		
2B	TB2-7,8	I2L	43	4	2		
2C	TB2-9,10	I3U	63	5	2		
4A	TB4-9,10	I6U	41	11	4		
4B	TB4-11,12	I6L	45	12	4	10	
6A	TB3-5,6	J2U	40	21	6		
6B	TB3-7,8	J2L	44	22	6		
6C	TB3-9,10	J3U	64	23	6		
8A	TB5-9,10	J6U	42	31	8		
8B	TB5-11,12	J6L	46	32	8	10	
PED PUSH BUTTONS							
P21,P22	TB8-4,6	I12U	67	PED 2	2 PED		
P41,P42	TB8-5,6	I12L	69	PED 4	4 PED		
P61,P62	TB8-7,9	I13U	68	PED 6	6 PED		
P81,P82	TB8-8,9	I13L	70	PED 8	8 PED		

NOTE:
INSTALL DC ISOLATORS IN INPUT FILE SLOTS I12 AND I13.

INPUT FILE POSITION LEGEND: J2L
FILE J
SLOT 2
LOWER

FLASHER CIRCUIT MODIFICATION DETAIL

IN ORDER TO INSURE THAT SIGNALS FLASH CONCURRENTLY ON THE SAME APPROACH, MAKE THE FOLLOWING FLASHER CIRCUIT CHANGES:

1. ON REAR OF PDA - REMOVE WIRE FROM TERM. T2-4 AND TERMINATE ON T2-2.
2. ON REAR OF PDA - REMOVE WIRE FROM TERM. T2-5 AND TERMINATE ON T2-3.
3. REMOVE FLASHER UNIT 2.

THE CHANGES LISTED ABOVE TIES ALL PHASES AND OVERLAPS TO FLASHER UNIT 1.

This plan supersedes the plan signed and sealed on 5/24/2021.

THIS ELECTRICAL DETAIL IS FOR
THE SIGNAL DESIGN: 05-2247
DESIGNED: February 2024
SEALED: 02/27/2024
REVISED: N/A

Electrical Detail - Sheet 1 of 2

DOCUMENT NOT CONSIDERED FINAL UNLESS ALL SIGNATURES COMPLETED

ELECTRICAL AND PROGRAMMING DETAILS FOR:

Prepared in the Offices of:
Transportation Mobility and Safety Division
STATE OF NORTH CAROLINA DEPARTMENT OF TRANSPORTATION
Signals Management Section
750 N.Greenfield Pkwy,Garner,NC 27529

SR 2215 (Buffaloe Road)
at
Valley Stream Drive

Division 5 | Wake County | Raleigh

PLAN DATE: February 2024 | REVIEWED BY:
PREPARED BY: S.Kirkpatrick | REVIEWED BY:

REVISIONS	INIT.	DATE

SEAL
NORTH CAROLINA PROFESSIONAL SEAL 036833 ENGINEER RYAN W. HOUGH

DocuSigned by:
Ryan W. Hough 02/27/2024
A9320EAA2054C4... DATE

SIG. INVENTORY NO. 05-2247

21-FEB-2024 14:42
S:\TMS\Traffic Signals\Workgroups\Sig Mgmt\Projects From Signal Design\Active Projects\Kirkpatrick\05-1780 & 05-2247 (HS-2005G)\05247_sm.ele.20240221.dgn
sgkirkpatrick